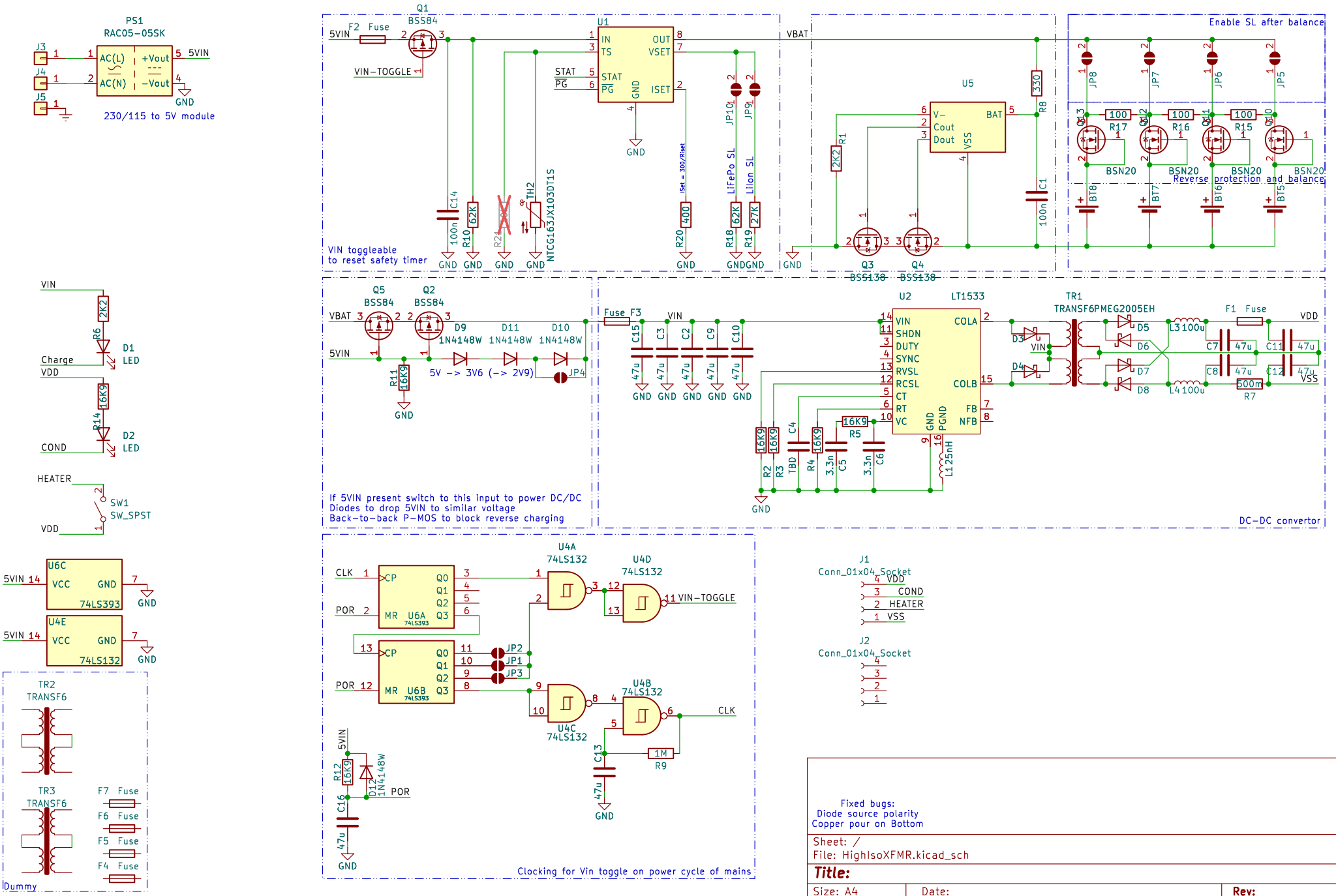
PS1
RAC05-05SK
230/115 to 5V module
Q1
BSS84
F2 Fuse
5VIN
VIN-TOGGLE
U1
IN
TS
STAT
PG
OUT
VSET
ISET
GND
ISet = 300/Riset
LiFePo SL
LiIon SL
JP10
JP9
C14
100n
R10
62K
R21
TH2
NTCG163JX103DT1S
R20
400
R18
62K
R19
27K
VIN toggleable
to reset safety timer
VBAT
U5
V-
Cout
Dout
BAT
VSS
R1
2K2
R8
330
C1
100n
Q3
Q4
BSS138
Enable SL after balance
JP8
JP7
JP6
JP5
R17
R16
R15
100
BSN20
BT8
BT7
BT6
BT5
Reverse protection and balance
Q5
BSS84
Q2
BSS84
D9
1N4148W
D11
1N4148W
D10
1N4148W
5V -> 3V6 (-> 2V9)
JP4
R11
16K9
If 5VIN present switch to this input to power DC/DC
Diodes to drop 5VIN to similar voltage
Back-to-back P-MOS to block reverse charging
Fuse F3
C15
C3
C2
C9
C10
47u
U2
LT1533
VIN
SHDN
DUTY
SYNC
RVSL
RCSL
CT
RT
VC
COLA
COLB
FB
NFB
PGND
R2
R3
TBD
R4
C4
3.3n
C5
R5
C6
L1 25nH
TR1
TRANSF6PMEG2005EH
D3
D4
D5
D6
D7
D8
L3 100u
L4 100u
F1 Fuse
VDD
VSS
C7
C8
C11
C12
R7
500m
DC-DC convertor
VIN
R6
2K2
D1
LED
Charge
VDD
R14
16K9
D2
LED
COND
HEATER
SW1
SW_SPST
VDD
U6C
VCC
GND
74LS393
U4E
74LS132
TR2
TRANSF6
TR3
TRANSF6
F7 Fuse
F6 Fuse
F5 Fuse
F4 Fuse
Dummy
U4A
74LS132
U4D
74LS132
CLK
POR
U6A
74LS393
U6B
74LS393
JP2
JP1
JP3
U4C
74LS132
U4B
74LS132
VIN-TOGGLE
CLK
R9
1M
C13
R12
16K9
D12
1N4148W
C16
Clocking for Vin toggle on power cycle of mains
J1
Conn_01x04_Socket
VDD
COND
HEATER
VSS
J2
Conn_01x04_Socket
Fixed bugs:
Diode source polarity
Copper pour on Bottom
Sheet: /
File: HighIsoXFMR.kicad_sch
Title:
Size: A4
Date:
Rev:
KiCad E.D.A. 8.0.9
Id: 1/1